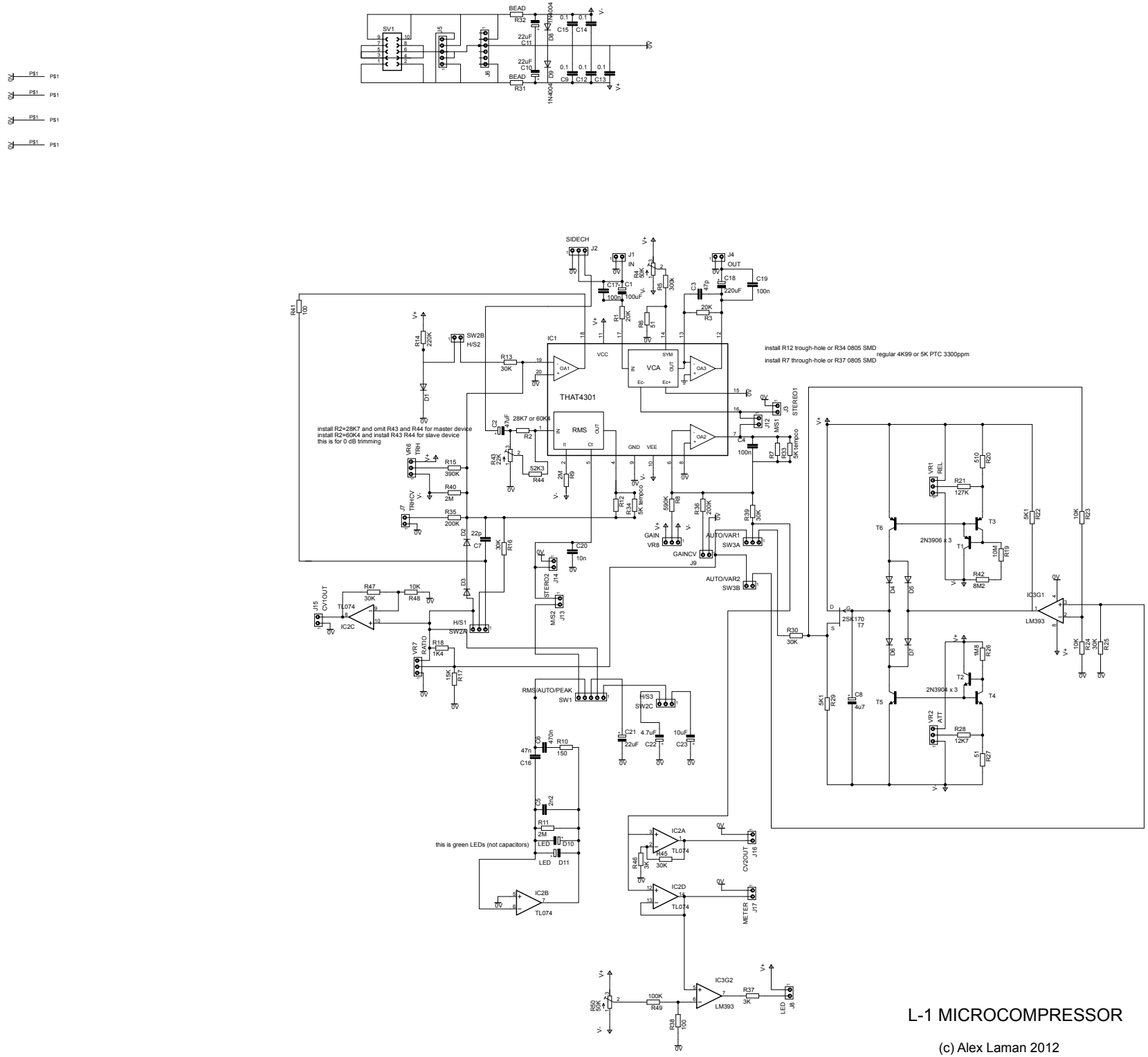

L-1 MICROCOMPRESSOR

(c) Alex Laman 2012